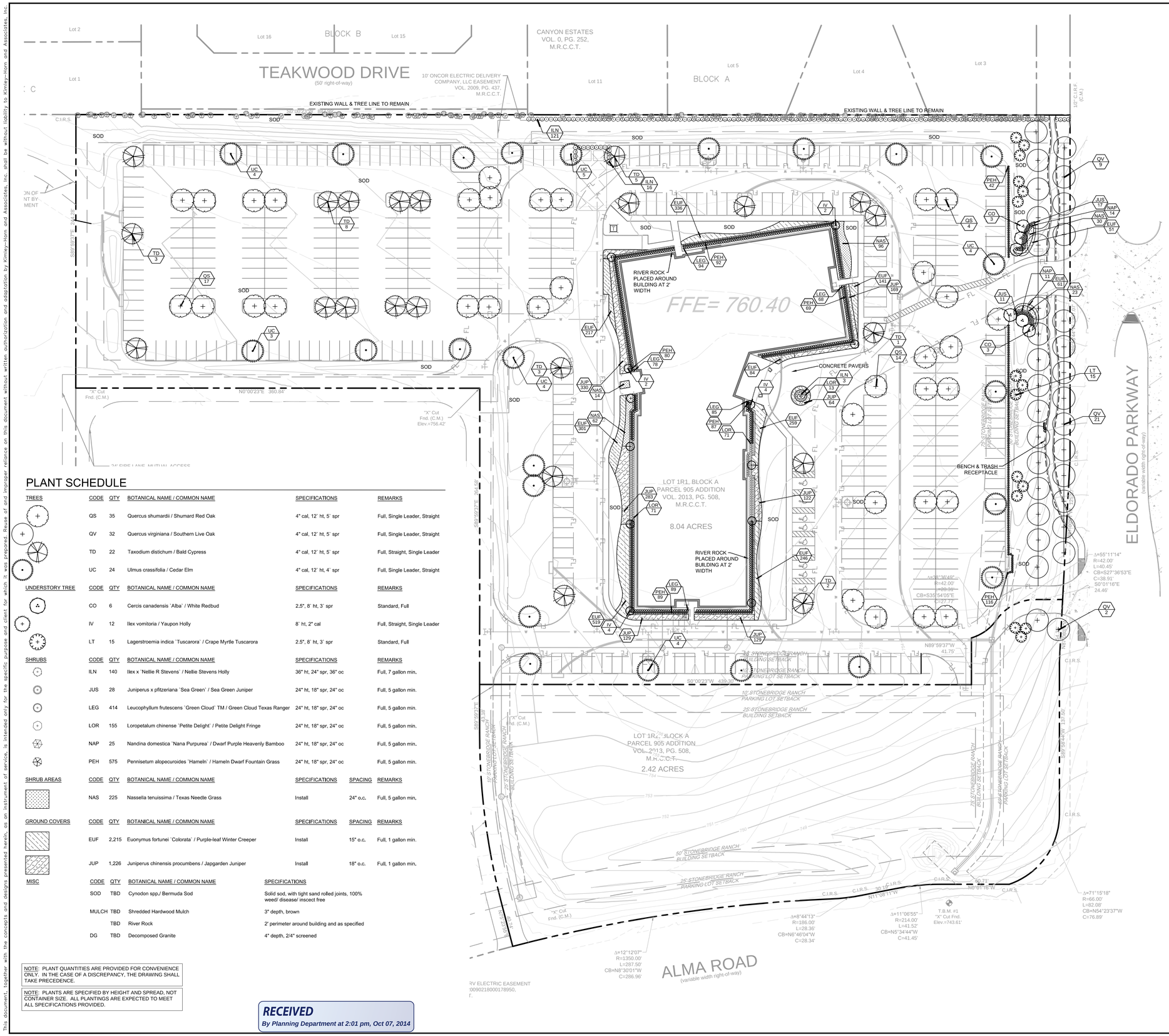

PLANT SCHEDULE

TREES	CODE	QTY	BOTANICAL NAME / COMMON NAME	SPECIFICATIONS	REMARKS
	QS	35	Quercus shumardii / Shumard Red Oak	4" cal, 12` ht, 5` spr	Full, Single Leader, Straight
	QV	32	Quercus virginiana / Southern Live Oak	4" cal, 12` ht, 5` spr	Full, Single Leader, Straight
	TD	22	Taxodium distichum / Bald Cypress	4" cal, 12` ht, 5` spr	Full, Straight, Single Leader
	UC	24	Ulmus crassifolia / Cedar Elm	4" cal, 12` ht, 4` spr	Full, Single Leader, Straight

UNDERSTORY TREE	CODE	QTY	BOTANICAL NAME / COMMON NAME	SPECIFICATIONS	REMARKS
	CO	6	Cercis canadensis `Alba` / White Redbud	2.5", 8` ht, 3` spr	Standard, Full
	IV	12	Ilex vomitoria / Yaupon Holly	8` ht, 2" cal	Full, Straight, Single Leader
	LT	15	Lagerstroemia indica `Tuscarora` / Crape Myrtle Tuscarora	2.5", 8` ht, 3` spr	Standard, Full

SHRUBS	CODE	QTY	BOTANICAL NAME / COMMON NAME	SPECIFICATIONS	REMARKS
	ILN	140	Ilex x `Nellie R Stevens` / Nellie Stevens Holly	36" ht, 24" spr, 36" oc	Full, 7 gallon min.
	JUS	28	Juniperus x pfitzeriana `Sea Green` / Sea Green Juniper	24" ht, 18" spr, 24" oc	Full, 5 gallon min.
	LEG	414	Leucophyllum frutescens `Green Cloud` TM / Green Cloud Texas Ranger	24" ht, 18" spr, 24" oc	Full, 5 gallon min.
	LOR	155	Loropetalum chinense `Petite Delight` / Petite Delight Fringe	24" ht, 18" spr, 24" oc	Full, 5 gallon min.
	NAP	25	Nandina domestica `Nana Purpurea` / Dwarf Purple Heavenly Bamboo	24" ht, 18" spr, 24" oc	Full, 5 gallon min.
	PEH	575	Pennisetum alopecuroides `Hameln` / Hameln Dwarf Fountain Grass	24" ht, 18" spr, 24" oc	Full, 5 gallon min.

SHRUB AREAS	CODE	QTY	BOTANICAL NAME / COMMON NAME	SPECIFICATIONS	SPACING	REMARKS
	NAS	225	Nassella tenuissima / Texas Needle Grass	Install	24" o.c.	Full, 5 gallon min.

GROUND COVERS	CODE	QTY	BOTANICAL NAME / COMMON NAME	SPECIFICATIONS	SPACING	REMARKS
	EUF	2,215	Euonymus fortunei `Colorata` / Purple-leaf Winter Creeper	Install	15" o.c.	Full, 1 gallon min.
	JUP	1,226	Juniperus chinensis procumbens / Japgarden Juniper	Install	18" o.c.	Full, 1 gallon min.

MISC	CODE	QTY	BOTANICAL NAME / COMMON NAME	SPECIFICATIONS
	SOD	TBD	Cynodon spp./ Bermuda Sod	Solid sod, with tight sand rolled joints, 100% weed/ disease/ insect free
	MULCH	TBD	Shredded Hardwood Mulch	3" depth, brown
		TBD	River Rock	2" perimeter around building and as specified
	DG	TBD	Decomposed Granite	4" depth, 2/4" screened

NOTE: PLANT QUANTITIES ARE PROVIDED FOR CONVENIENCE ONLY. IN THE CASE OF A DISCREPANCY, THE DRAWING SHALL TAKE PRECEDENCE.

NOTE: PLANTS ARE SPECIFIED BY HEIGHT AND SPREAD, NOT CONTAINER SIZE. ALL PLANTINGS ARE EXPECTED TO MEET ALL SPECIFICATIONS PROVIDED.

RECEIVED
By Planning Department at 2:01 pm, Oct 07, 2014

LANDSCAPE REQUIREMENTS

	REQUIRED	PROVIDED
PARKWAY PLANTINGS (DESIGN GUIDELINES 6.12)		
ELDORADO PARKWAY, 467' LF		
DOUBLE STAGGERED ROW OF TREES, 30' OC (LIVE OAKS, 4" CAL, 12' HT)	32	32
ORNAMENTAL TREES, 3/ 100 LF		
467/ 100 = 5 X 3 =	15 ORN. TREES	15 ORN. TREES
PARKING BUFFER-CONT EVERGREEN SHRUB (MIN 5 GAL)	CONT EVGR	CONT EVGR
BENCH & TRASH RECEPTACLE SPACED 750 LF OC	1	1
PARKING LOT		
PARKING ROW TO BEGIN & END WITH LA ISLAND		
1 LA ISLAND/ 10 CONSECUTIVE PARKING SPACES		
1 LG CANOPY TREE/ ISLAND	50 CANOPY	70 CANOPY
SITE		
ENTRANCES- ACCENTED & HEAVILY LANDSCAPED	REQUIRED	PROVIDED
FOUNDATION PLANTINGS & ACCENTS	ENCOURAGED	PROVIDED
SEASONAL COLOR	ENCOURAGED	PROVIDED

NOTE: TREES TO BE PLACED 5' FROM SIDEWALK

DESIGN ELEMENTS

BENCH: DUMOR, INC (PHONE 800-259-7244)
MODEL #: 88-60R, OR APPROVED EQUAL
DESCRIPTION: REDWOOD BENCH, 6' LONG, 2 SUPPORTS
SUPPORT: S-2 SURFACE PLATE
FRAME FINISH COLOR: BLACK

TRASH RECEPTACLE: DUMOR, INC. (PHONE 800-259-7244)
MODEL #: 41-30R, OR APPROVED EQUAL
DESCRIPTION: REDWOOD RECEPTACLE, 32 GALLON FOR EMBEDMENT
SUPPORT: S-1 EMBEDMENT
FRAME FINISH COLOR: BLACK
ACCESSORIES: 46-00, MOLDED POLYETHYLENE COVER WITH VINYL-COATED CABLE AND 10" OPENING; 4 LBS

PLANTING NOTES

1. ALL PLANT MATERIAL SHALL BE INSTALLED ACCORDING TO SOUND NURSERY PRACTICES AND SHALL MEET ALL STANDARDS AS STATED IN THE LATEST EDITION OF "AMERICAN STANDARD FOR NURSERY STOCK" BY THE AMERICAN ASSOCIATION OF NURSERYMEN.
2. NO SUBSTITUTIONS IN PLANT MATERIALS SHALL BE MADE WITHOUT WRITTEN AUTHORIZATION FROM OWNER OR LANDSCAPE ARCHITECT, IN THE EVENT OF DISCREPANCIES BETWEEN THE DRAWING AND THE PLANT LIST, THE DRAWING SHALL PREVAIL.
3. LOCATE ALL UTILITIES PRIOR TO ANY DIGGING OPERATIONS. CONTRACTOR SHALL BE RESPONSIBLE FOR ALL DAMAGES TO EXISTING UTILITIES INCURRED BY HIS WORK.
4. REFERENCE IRRIGATION PLAN FOR BED IRRIGATION INFORMATION.
5. STAKING AND GUYING ALTERNATIVES: METHODS INDICATED IN DRAWING DETAILS ARE PREFERRED. CONTRACTOR MAY SUGGEST ALTERNATE METHODS, ASSUMING FULL RESPONSIBILITY FOR THEIR IMPLEMENTATION. CONTRACTOR SHALL REPLACE, PLANT, OR UPRIGHT ANY TREES BLOWN OVER OR DAMAGED DUE TO INADEQUATE STAKING AT NO ADDITIONAL COST TO THE OWNER.
6. PLANTS MASSED IN BEDS SHALL BE ARRANGED USING TRIANGULAR SPACING.
7. PROVIDE A STEEL EDGE OR CONCRETE MOW STRIP BETWEEN ALL PLANTING BEDS AND LAWN AREAS. REFERENCE SITE PLAN.
8. ALL PLANTING BEDS TO BE TOP DRESSED WITH A MINIMUM OF 3" SHREDDED HARDWOOD MULCH.
9. PROVIDE GRASS SEEDING OR LAY BERMUDA SOD FOR PROPOSED LAWN AREAS TO ALL EDGES OF PAVEMENT AND OR LIMITS OF DISTURBANCE OUTSIDE R.O.W. OR PROPOSED LANDSCAPE EASEMENT.
10. THE CONTRACTOR SHALL BE RESPONSIBLE FOR THE MAINTENANCE OF ALL LANDSCAPING UNTIL FINAL ACCEPTANCE. ALL REQUIRED LANDSCAPING SHALL BE MAINTAINED IN A NEAT AND ORDERLY MANNER AT ALL TIMES. THE WORK SHALL INCLUDE, BUT NOT TO BE LIMITED TO, MOWING, EDGING, PRUNING, FERTILIZING, WATERING, WEEDING, AND OTHER SUCH ACTIVITIES COMMON TO THE MAINTENANCE OF LANDSCAPING. ALL PLANT MATERIALS SHALL BE MAINTAINED IN A HEALTHY AND GROWING CONDITION AS IS APPROPRIATE FOR THE SEASON OF THE YEAR, PLANT MATERIAL THAT DIES SHALL BE REPLACED WITH THE PLANT MATERIAL OF SIMILAR SIZE AND VARIETY.
11. CONTRACTOR SHALL WARRANTY PLANT MATERIAL TO REMAIN ALIVE AND HEALTHY FOR A PERIOD OF ONE YEAR AFTER FINAL ACCEPTANCE. WARRANTY SHALL NOT INCLUDE DAMAGE FOR LOSS OF PLANT MATERIAL DUE TO NATURAL CAUSES, ACTS OF VANDALISM OR NEGLIGENCE ON THE PART OF THE OWNER.
12. ALL DISTURBED AREAS WITHIN LIMITS OF CONSTRUCTION NOT CALLED TO BE SODDED, SHALL BE REESTABLISHED WITH BERMUDA SOD.
13. ALL LANDSCAPE BED AREAS TO BE PREPARED USING "READY TO PLANT BEDDING MIX" BY SOIL BUILDING SOLUTIONS (OR APPROVED EQUAL). INSTALL TO DEPTHS, PER PLANTING DETAILS (12" DEPTH MIN.) FINISHED GRADES OF PLANTING BEDS TO BE 2" BELOW FINISHED GRADE OF ADJACENT PAVING OR AS SHOWN ON GRADING PLAN.
14. ALL SOD AREAS TO RECEIVE 4" DEPTH (MIN) TOPSOIL PRIOR TO INSTALLATION. TOPSOIL SHALL BE NATURAL, FRIABLE, FERTILE, pH RANGE OF 6.0-6.5, AND FREE OF TRASH, DEBRIS, STONES, WEEDS, AND TWIGS/BRANCHES.

NOTE: THE CONTRACTOR SHALL VERIFY WATER RESTRICTIONS WITHIN THE CITY OF MCKINNEY AT TIME OF PLANTING. SHOULD WATER RESTRICTIONS NOT ALLOW HYDROMULCH, HYDROSEEDING, OR SPRIGGING (STAGE 3 AND STAGE 4 WATER RESTRICTIONS), AN APPROVED ALTERNATIVE FOR GRASSING SHALL BE INSTALLED.

No.	REVISIONS	DATE	BY

Kimley»Horn
5750 GENESIS COURT, SUITE 200, FRISCO, TX 75034
PHONE: 972-335-3580 FAX: 972-335-3779
WWW.KIMLEY-HORN.COM
TEXAS REGISTERED ENGINEERING FIRM F-928

PRELIMINARY
FOR REVIEW ONLY
Not for construction or permit purposes.
Kimley»Horn
R.L.A. LEAH M. CAMPBELL
L.A. No. 2900 Date SEPT 2014

KHA PROJECT 63486525
DATE 9/17/2014
SCALE AS SHOWN
DESIGNED BY: LMC
DRAWN BY: LMC
CHECKED BY: LMC

McKINNEY MEDICAL VILLAGE
COLLIN COUNTY, TEXAS

PRELIMINARY LANDSCAPE PLAN

SHEET NUMBER
L-01

This document, together with the concepts and designs presented herein, as an instrument of service, is intended only for the specific purpose and client for which it was prepared. Reuse of and improper reliance on this document without written authorization and adaptation by Kimley-Horn and Associates, Inc. shall be without liability to Kimley-Horn and Associates, Inc.

IMAGES: XREF:Site - XREF:Utl - XREF:dBody - XREF:Grad - XREF:dSite - XREF:Landscape - XREF:xTree - XREF:x2456
XREFS: XREF:Site - XREF:Utl - XREF:dBody - XREF:Grad - XREF:dSite - XREF:Landscape - XREF:xTree - XREF:x2456
PLOTTED BY: KURTIS.WOODRUM@KHA
DWG NAME: K:\FRI_CIVIL\063486525-HARROD_MCKINNEY\DWG\PLAN SET\L-01 LANDSCAPE PLAN.DWG
LAST SAVED: 9/25/2014 10:13 AM

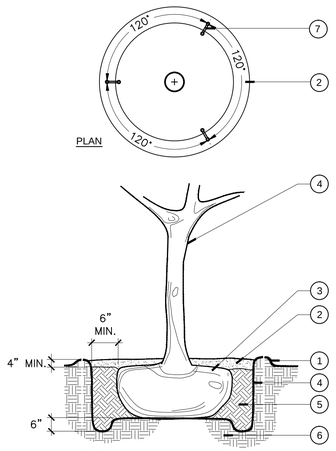

1. 4" EARTH SAUCER
2. 4" MULCH PER SPECIFICATIONS
3. ROOT BALL: REMOVE BURLAP, BURLAP TIES, AND WIRE BASKET FROM TOP 1/3 OF ROOTBALL. REMOVE ALL NYLON STRINGS, PLASTIC LINERS, AND OTHER SYNTHETIC MATERIALS FROM THE ENTIRE ROOTBALL.
4. PLANTING PIT EXCAVATED 12" LARGER (MIN.) THAN WIDTH OF ROOTBALL. PIT DEPTH AS NEEDED TO SET ROOTBALL COLLAR AT PROPOSED FINISHED GRADE. PLACE ROOTBALL ON SOLID SOIL AND NOT LOOSE BACKFILL.
5. PIT BACKFILL SOIL PER SPECIFICATIONS
6. UNDISTURBED EARTH
7. SECURE TREES WITH TREE STAPLES, PROVIDE 3 PER TREE, TOP OF STAPLE TO BE BELOW TOP OF MULCH.

A TREE PLANTING

N.T.S.

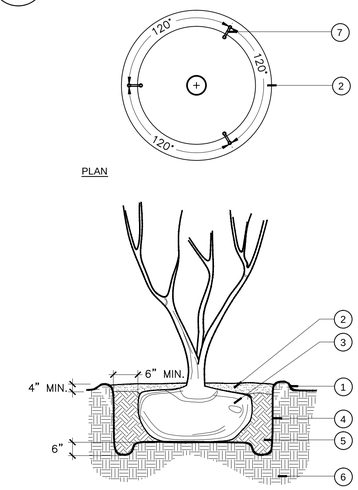

1. 4" EARTH SAUCER
2. 4" MULCH PER SPECIFICATIONS
3. ROOT BALL: REMOVE BURLAP, BURLAP TIES, AND WIRE BASKET FROM TOP 1/3 OF ROOTBALL. REMOVE ALL NYLON STRINGS, PLASTIC LINERS, AND OTHER SYNTHETIC MATERIALS FROM THE ENTIRE ROOTBALL.
4. PLANTING PIT EXCAVATED 12" LARGER (MIN.) THAN WIDTH OF ROOTBALL. PIT DEPTH AS NEEDED TO SET ROOTBALL COLLAR AT PROPOSED FINISHED GRADE. PLACE ROOTBALL ON SOLID SOIL AND NOT LOOSE BACKFILL.
5. PIT BACKFILL SOIL PER SPECIFICATIONS
6. UNDISTURBED EARTH
7. SECURE TREES WITH TREE STAPLES, PROVIDE 3 PER TREE, TOP OF STAPLE TO BE BELOW TOP OF MULCH.

B MULTI-TRUNK TREE PLANTING

N.T.S.

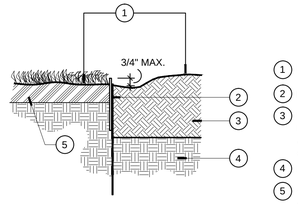

1. DIFFERENT PLANTING TREATMENTS.
2. METAL EDGING
3. BED SOIL. 12" MINIMUM DEPTH. REF: NOTES AND/OR SPECS FOR MIX. & DEPTH.
4. NATIVE SOIL
5. 4" TOPSOIL. REF: NOTES AND/OR SPECS FOR MIX. & DEPTH.

D STEEL EDGING

N.T.S.

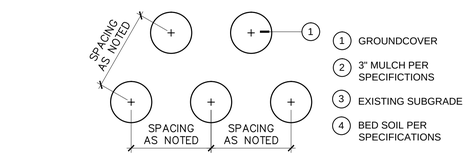

1. GROUNDCOVER
2. 3" MULCH PER SPECIFICTIONS
3. EXISTING SUBGRADE
4. BED SOIL PER SPECIFICATIONS

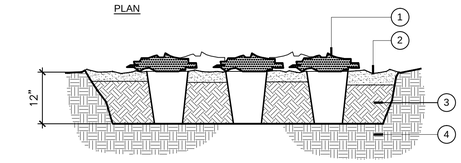

E GROUNDCOVER PLANTING

N.T.S.

GENERAL LANDSCAPE SPECIFICATIONS AND NOTES

A. SCOPE OF WORK

1. THE WORK CONSISTS OF FURNISHING ALL LABOR, MATERIALS, EQUIPMENT, TOOLS, TRANSPORTATION, AND ANY OTHER APPURTENANCES NECESSARY FOR THE COMPLETION OF THIS PROJECT AS SHOWN ON THE DRAWINGS, AS INCLUDED IN THE PLANT LIST, AND AS HEREIN SPECIFIED.

2. WORK SHALL INCLUDE MAINTENANCE AND WATERING OF ALL PLANTING AREAS OF THIS CONTRACT UNTIL CERTIFICATION OF ACCEPTABILITY BY THE OWNER.

B. PROTECTION OF EXISTING STRUCTURES

ALL EXISTING BUILDINGS, WALKS, WALLS, PAVING, PIPING, AND OTHER ITEMS OF CONSTRUCTION AND PLANTING ALREADY COMPLETED OR ESTABLISHED SHALL BE PROTECTED FROM DAMAGE BY THIS CONTRACTOR UNLESS OTHERWISE SPECIFIED. ALL DAMAGE RESULTING FROM NEGLIGENCE SHALL BE REPAIRED OR REPLACED TO THE SATISFACTION OF THE OWNER.

C. PROTECTION OF EXISTING PLANT MATERIALS OUTSIDE LIMIT OF WORK

THE CONTRACTOR SHALL BE RESPONSIBLE FOR ALL UNAUTHORIZED CUTTING OR DAMAGE TO TREES AND SHRUBS EXISTING OR OTHERWISE, CAUSED BY CARELESS OPERATION OF EQUIPMENT, STOCKPILING OF MATERIALS, ETC. THIS SHALL INCLUDE COMPACTION BY DRIVING OR PARKING INSIDE THE DRIP-LINE OR THE SPILLING OF OIL, GASOLINE, OR OTHER DELETERIOUS MATERIALS WITHIN THE DRIP-LINE. NO MATERIALS SHALL BE BURNED WHERE THE HEAT WILL DAMAGE ANY PLANT. TREES KILLED OR DAMAGED SO THAT THEY ARE MISSHAPEN AND/ OR UNSIGHTLY SHALL BE REPLACED AT THE COST TO THE CONTRACTOR OF ONE HUNDRED DOLLARS ($100) PER CALIPER INCH ON AN ESCALATING SCALE WHICH ADDS AN ADDITIONAL TWENTY (20) PER CENT PER INCH OVER FOUR (4) INCHES CALIPER AS FIXED AND AGREED LIQUIDATED DAMAGES. CALIPER SHALL BE MEASURED SIX (6) INCHES ABOVE GROUND LEVEL FOR TREES UP TO AND INCLUDING FOUR (4) INCHES IN CALIPER AND TWELVE (12) INCHES ABOVE GROUND LEVEL FOR TREES OVER FOUR (4) INCHES IN CALIPER.

D. MATERIALS

1. GENERAL

SAMPLES OF MATERIALS AS LISTED BELOW SHALL BE SUBMITTED FOR APPROVAL, ON THE SITE OR AS OTHERWISE DETERMINED BY THE OWNER. UPON APPROVAL OF SAMPLES, DELIVERY OF MATERIALS MAY BEGIN.

MATERIALS	SAMPLES
MULCH	ONE (1) CUBIC FOOT
TOPSOIL	ONE (1) CUBIC YARD
PLANTS	ONE (1) OF EACH VARIETY

2. PLANT MATERIALS

A. PLANT SPECIES AND SIZE SHALL CONFORM TO THOSE INDICATED ON THE DRAWINGS. NOMENCLATURE SHALL CONFORM TO STANDARDIZED PLANT NAMES, 1942 EDITION. ALL NURSERY STOCK SHALL BE IN ACCORDANCE WITH GRADES AND STANDARDS FOR NURSERY PLANTS PARTS I AND II, LATEST EDITION PUBLISHED BY THE TEXAS DEPARTMENT OF AGRICULTURE AND CONSUMER SERVICES. ALL PLANTS SHALL BE TEXAS GRADE NO. 1 OR BETTER AS DETERMINED BY THE TEXAS DIVISION OF PLANT INDUSTRY. ALL PLANTS SHALL BE FRESHLY DUG, SOUND, HEALTHY, VIGOROUS, WELL-BRANCHED AND FREE OF DISEASE AND INSECTS, INSECT EGGS AND LARVAE AND SHALL HAVE ADEQUATE ROOT SYSTEMS. TREES FOR PLANTING IN ROWS SHALL BE UNIFORM IN SIZE AND SHAPE. ALL MATERIALS SHALL BE SUBJECT TO APPROVAL BY THE OWNER. WHERE ANY REQUIREMENTS ARE OMITTED FROM THE PLANT LIST, THE PLANTS FURNISHED SHALL BE NORMAL FOR THE VARIETY. PLANTS SHALL BE PRUNED PRIOR TO DELIVERY ONLY UPON THE APPROVAL OF THE OWNER.
B. MEASUREMENTS: THE HEIGHT AND/OR WIDTH OF TREES SHALL BE MEASURED FROM THE GROUND OR ACROSS THE NORMAL SPREAD OF BRANCHES WITH THE PLANTS IN THEIR NORMAL POSITION. THIS MEASUREMENT SHALL NOT INCLUDE THE IMMEDIATE TERMINAL GROWTH. PLANTS LARGER IN SIZE THAN THOSE SPECIFIED IN THE PLANT LIST MAY BE USED IF APPROVED BY THE OWNER. IF THE USE OF LARGER PLANTS IS APPROVED, THE BALL OF EARTH OR SPREAD OF ROOTS SHALL BE INCREASED IN PROPORTION TO THE SIZE OF THE PLANT.

C. INSPECTION: PLANTS SHALL BE SUBJECT TO INSPECTION AND APPROVAL AT THE PLACE OF GROWTH, OR UPON DELIVERY TO THE SITE, AS DETERMINED BY THE OWNER, FOR QUALITY, SIZE, AND VARIETY; SUCH APPROVAL SHALL NOT IMPAIR THE RIGHT OF INSPECTION AND REJECTION AT THE SITE DURING PROGRESS OF THE WORK OR AFTER COMPLETION FOR SIZE AND CONDITION OF BALLS OR ROOTS, LATENT DEFECTS OR INJURIES. REJECTED PLANTS SHALL BE REMOVED IMMEDIATELY FROM THE SITE. NOTICE REQUESTING INSPECTION SHALL BE SUBMITTED IN WRITING BY THE CONTRACTOR AT LEAST ONE (1) WEEK PRIOR TO ANTICIPATED DATE.

E. TOPSOIL AND SAND

PLANTING BED BACKFILL
ALL LANDSCAPE BED AREAS TO BE PREPARED USING "READY TO PLANT BEDDING MIX" BY SOIL BUILDING SOLUTIONS (OR APPROVED EQUAL). INSTALL TO DEPTHS, PER PLANTING DETAILS (12" DEPTH MIN.) FINISHED GRADES OF PLANTING BEDS TO BE 2" BELOW FINISHED GRADE OF ADJACENT PAVING OR AS SHOWN ON GRADING PLAN.

SOD/SEED AREA TOPSOIL
ALL SOD AREAS TO RECEIVE 4" DEPTH (MIN) "ENRICHED TOP SOIL" BY SOIL BUILDING SOLUTIONS (OR APPROVED EQUAL) PRIOR TO INSTALLATION. TOPSOIL SHALL BE NATURAL, FRIABLE, FERTILE, PH RANGE OF 6.0-6.5 WITH 25% (MIN.) ORGANIC MATERIAL, AND FREE OF TRASH, DEBRIS, STONES, WEEDS, AND TWIGS/BRANCHES. THE PARTICLE SIZES SHALL BE SUCH THAT 98.5% OF THE TOPSOIL WILL PASS THROUGH A 1/2 INCH SCREEN, AND 99% MORE SHALL PASS THROUGH A 3/4 INCH SCREEN. TOPSOIL SHALL BE REVIEWED/APPROVED BY OWNER/LANDSCAPE ARCHITECT PRIOR TO INSTALLATION. CONTRACTOR TO SUBMIT SAMPLES IN 1 GAL (MIN.) CONTAINER.

F. WATER

WATER NECESSARY FOR PLANTING AND MAINTENANCE SHALL BE OF SATISFACTORY QUALITY TO SUSTAIN AN ADEQUATE GROWTH OF PLANTS AND SHALL NOT CONTAIN HARMFUL, NATURAL OR MAN-MADE ELEMENTS DETRIMENTAL TO PLANTS. WATER MEETING THE ABOVE STANDARD SHALL BE OBTAINED ON THE SITE FROM THE OWNER, IF AVAILABLE, AND THE CONTRACTOR SHALL BE RESPONSIBLE TO MAKE ARRANGEMENTS FOR ITS USE BY HIS TANKS, HOSES, SPRINKLERS, ETC. IF SUCH WATER IS NOT AVAILABLE AT THE SITE, THE CONTRACTOR SHALL PROVIDE SUCH SATISFACTORY WATER FROM SOURCES OFF THE SITE AT NO ADDITIONAL COST TO THE OWNER.

G. COMMERCIAL FERTILIZER

COMMERCIAL FERTILIZER SHALL BE A COMPLETE FORMULA; IT SHALL BE UNIFORM IN COMPOSITION, DRY AND FREE FLOWING. THIS FERTILIZER SHALL BE DELIVERED TO THE SITE IN THE ORIGINAL UNOPENED CONTAINERS, EACH BEARING THE MANUFACTURER'S GUARANTEED STATEMENT OF ANALYSIS.

FIFTY PERCENT (50%) OF THE NITROGEN SHALL BE DERIVED FROM NATURAL ORGANIC SOURCES. THE FOLLOWING FERTILIZERS SHALL BE USED AND APPLIED AT RATES AS SUGGESTED BY MANUFACTURER'S SPECIFICATIONS:

1. SHRUBS AND TREES - MILORGANITE, OR APPROVED EQUAL
2. ANNUALS AND GROUNDCOVERS - OSMOCOTE:SIERRA BLEND 14-14-14
3. SOD - 8-8-8 FERTILIZER

IN ADDITION TO SURFACE APPLIED FERTILIZERS, ALL CONTAINER GROWN AND FIELD GROWN PLANT MATERIAL SHALL RECEIVE "AGRIFORM" PLANTING TABLETS 24-10-5 FORMULA, 21 GRAM OR EQUAL. THESE TABLETS SHALL BE PLACED AT A DEPTH OF ROOT BALL AT THE RATE AS SPECIFIED BY MANUFACTURER.

H. MULCH

MULCH MATERIAL SHALL BE MOISTENED AT THE TIME OF APPLICATION TO PREVENT WIND DISPLACEMENT, AND APPLIED AT A DEPTH OF 3 INCHES. SEE PLANT LIST FOR TYPE OF MATERIAL AND GRADE.

I. DIGGING AND HANDLING

1. PROTECT ROOTS OF BALLS OF PLANTS AT ALL TIMES FROM SUN AND DRYING WINDS, WATER AND FREEZING, AS NECESSARY UNTIL PLANTING. PLANT MATERIALS SHALL BE ADEQUATELY PACKED TO PREVENT BREAKAGE AND DRYING OUT DURING TRANSIT. TREES TRANSPORTED MORE THAN TEN (10) MILES OR WHICH ARE NOT PLANTED WITHIN THREE (3) DAYS OF DELIVERY TO SITE SHALL BE SPRAYED WITH AN ANTI-TRANSPIRANT PRODUCT ("WILTPRUF" OR EQUAL) TO MINIMIZE TRANSPIRATIONAL WATER LOSS.

2. BALLED AND BURLAPPED PLANTS (B&B) SHALL BE DUG WITH FIRM, NATURAL BALLS OF SOIL OF SUFFICIENT SIZE TO ENCOMPASS THE FIBROUS AND FEEDING ROOTS OF THE PLANTS. NO PLANTS MOVED WITH A BALL SHALL BE PLANTED IF THE BALL IS CRACKED OR BROKEN. PLANTS BALLED AND BURLAPPED OR CONTAINER GROWN SHALL NOT BE HANDLED BY STEMS.

3. PLANTS MARKED "BR" IN THE PLANT LIST SHALL BE DUG WITH BARE ROOTS. THE ROOTS SHALL NOT BE CUT WITHIN THE MINIMUM SPREAD SPECIFIED IN THE PLANT LIST. CARE SHALL BE EXERCISED THAT THE ROOTS DO NOT DRY OUT IN MOVING AND PRIOR TO PLANTING.

4. PROTECTION OF PALMS (IF APPLICABLE): ONLY A MINIMUM OF FRONDS SHALL BE REMOVED FROM THE CROWN OF THE PALM TREES TO FACILITATE MOVING AND HANDLING. CLEAR TRUNK (CT) SHALL BE AS SPECIFIED AFTER THE MINIMUM OF FRONDS HAVE BEEN REMOVED. ALL PALMS SHALL BE BRACED PER DETAIL.

5. EXCAVATION OF TREE PITS SHALL BE DONE USING EXTREME CARE TO AVOID DAMAGE TO SURFACE AND SUBSURFACE ELEMENTS SUCH AS UTILITIES OR HARDSCAPE ELEMENTS, FOOTERS AND PREPARED SUB- BASES.

J. CONTAINER GROWN STOCK

1. ALL CONTAINER GROWN MATERIAL SHALL BE HEALTHY, VIGOROUS, WELL-ROOTED PLANTS AND ESTABLISHED IN THE CONTAINER IN WHICH THEY ARE SOLD. THE PLANTS SHALL HAVE TOPS WHICH ARE OF GOOD QUALITY AND ARE IN A HEALTHY GROWING CONDITION.

2. AN ESTABLISHED CONTAINER GROWN PLANT SHALL BE TRANSPLANTED INTO A CONTAINER AND GROWN IN THAT CONTAINER SUFFICIENTLY LONG FOR THE NEW FIBROUS ROOTS TO HAVE DEVELOPED SO THAT THE ROOT MASS WILL RETAIN ITS SHAPE AND HOLD TOGETHER WHEN REMOVED FROM THE CONTAINER. CONTAINER GROWN STOCK SHALL NOT BE HANDLED BY THEIR STEMS.

3. PLANT ROOTS BOUND IN CONTAINERS SHALL NOT BE ACCEPTABLE.

4. SUBSTITUTION OF NON-CONTAINER GROWN MATERIAL FOR MATERIAL EXPLICITLY SPECIFIED TO BE CONTAINER GROWN WILL NOT BE PERMITTED UNLESS WRITTEN APPROVAL IS OBTAINED FROM THE OWNER AND LANDSCAPE ARCHITECT.

K. COLLECTED STOCK

WHEN THE USE OF COLLECTED STOCK IS PERMITTED AS INDICATED ON THE PLANT LIST SCHEDULE, THE MINIMUM SIZES OF ROOTBALLS SHALL BE EQUAL TO THAT SPECIFIED FOR THE NEXT LARGER SIZE OF NURSERY GROWN STOCK OF THE SAME VARIETY.

L. NATIVE STOCK

PLANTS COLLECTED FROM WILD OR NATIVE STANDS SHALL BE CONSIDERED NURSERY GROWN WHEN THEY HAVE BEEN SUCCESSFULLY REESTABLISHED IN A NURSERY ROW AND GROWN UNDER REGULAR NURSERY CULTURAL PRACTICES FOR A MINIMUM OF TWO (2) GROWING SEASONS AND HAVE ATTAINED ADEQUATE ROOT AND TOP GROWTH TO INDICATE FULL RECOVERY FROM TRANSPLANTING INTO THE NURSERY ROW.

M. MATERIALS LIST

QUANTITIES NECESSARY TO COMPLETE THE WORK ON THE DRAWINGS SHALL BE FURNISHED BY THE CONTRACTOR. QUANTITY ESTIMATES HAVE BEEN MADE CAREFULLY, BUT THE LANDSCAPE ARCHITECT OR OWNER ASSUMES NO LIABILITY FOR OMISSIONS OR ERRORS. SHOULD A DISCREPANCY OCCUR BETWEEN THE BIDDERS TAKE OFF AND THE PLANT LIST QUANTITY, THE LANDSCAPE ARCHITECT SHALL BE NOTIFIED FOR CLARIFICATION PRIOR TO THE SUBMISSIONS OF BIDS. ALL DIMENSIONS AND/OR SIZES SPECIFIED SHALL BE THE MINIMUM ACCEPTABLE SIZE

N. FINE GRADING

1. FINE GRADING UNDER THIS CONTRACT SHALL CONSIST OF FINAL FINISHED GRADING OF LAWN AND PLANTING AREAS THAT HAVE BEEN ROUGH GRADED BY OTHERS. BERMING AS SHOWN ON THE DRAWINGS SHALL BE THE RESPONSIBILITY OF THE LANDSCAPE CONTRACTOR, UNLESS OTHERWISE NOTED.

2. THE LANDSCAPE CONTRACTOR SHALL FINE GRADE THE LAWN AND PLANTING AREAS TO BRING THE ROUGH GRADE UP TO FINAL FINISHED GRADE ALLOWING FOR THICKNESS OF SOD AND/OR MULCH DEPTH. THIS CONTRACTOR SHALL FINE GRADE BY HAND AND/OR WITH ALL EQUIPMENT NECESSARY INCLUDING A GRADING TRACTOR WITH FRONT-END LOADER FOR TRANSPORTING SOIL WITHIN THE SITE.

3. ALL PLANTING AREAS SHALL BE GRADED AND MAINTAINED TO ALLOW FREE FLOW OF SURFACE WATER. AREAS ADJACENT TO BUILDINGS SHALL SLOPE AWAY FROM THE BUILDINGS.

O. PLANTING PROCEDURES

1. CLEANING UP BEFORE COMMENCING WORK: THE CONTRACTOR SHALL CLEAN UP WORK AND SURROUNDING AREAS OF ALL RUBBISH OR OBJECTIONABLE MATTER. ALL MORTAR, CEMENT, AND TOXIC MATERIAL SHALL BE REMOVED FROM THE SURFACE OF ALL PLANT BEDS. THESE MATERIALS SHALL NOT BE MIXED WITH THE SOIL. SHOULD THE CONTRACTOR FIND SUCH SOIL CONDITIONS BENEATH THE SOIL WHICH WILL IN ANY WAY ADVERSELY AFFECT THE PLANT GROWTH, HE SHALL IMMEDIATELY CALL IT TO THE ATTENTION OF THE LANDSCAPE ARCHITECT OR OWNER. FAILURE TO DO SO BEFORE PLANTING SHALL MAKE THE CORRECTIVE MEASURES THE RESPONSIBILITY OF THE CONTRACTOR.

2. VERIFY LOCATIONS OF ALL UTILITIES, CONDUITS, SUPPLY LINES AND CABLES, INCLUDING BUT NOT LIMITED TO: ELECTRIC, GAS (LINES AND TANKS), WATER, SANITARY SEWER, STORMWATER LINES, CABLE AND TELEPHONE. PROPERLY MAINTAIN AND PROTECT EXISTING UTILITIES.

3. SUBGRADE EXCAVATION: SITE CONTRACTOR IS RESPONSIBLE TO REMOVE ALL EXISTING AND IMPORTED LIMEROCK AND LIMEROCK SUB-BASE FROM ALL LANDSCAPE PLANTING AREAS TO A MINIMUM DEPTH OF 36". SITE CONTRACTOR IS RESPONSIBLE TO BACKFILL THESE PLANTING AREAS TO ROUGH FINISHED GRADE WITH CLEAN TOPSOIL FROM AN ON-SITE SOURCE OR AN IMPORTED SOURCE. IF LIMEROCK OR OTHER ADVERSE CONDITIONS OCCUR IN PLANTED AREAS AFTER 36" DEEP EXCAVATION BY SITE CONTRACTOR, AND POSITIVE DRAINAGE CAN NOT BE ACHIEVED, LANDSCAPE CONTRACTOR SHALL UTILIZE PLANTING DETAIL THAT ADDRESSES POOR DRAINAGE.

4. FURNISH NURSERY'S CERTIFICATE OF COMPLIANCE WITH ALL REQUIREMENTS AS HEREIN SPECIFIED AND REQUIRED. INSPECT AND SELECT PLANT MATERIALS BEFORE PLANTS ARE DUG AT NURSERY OR GROWING SITE.

5. GENERAL: COMPLY WITH APPLICABLE FEDERAL, STATE, COUNTY, AND LOCAL REGULATIONS GOVERNING LANDSCAPE MATERIALS AND WORK. CONFORM TO ACCEPTED HORTICULTURAL PRACTICES AS USED IN THE TRADE. PLANTS SHALL BE PROTECTED UPON ARRIVAL AT THE SITE BY BEING THOROUGHLY WATERED AND PROPERLY MAINTAINED UNTIL PLANTED. PLANTS SHALL NOT REMAIN UNPROTECTED FOR A PERIOD EXCEEDING TWENTY-FOUR (24) HOURS. AT ALL TIMES WORKMANLIKE METHODS CUSTOMARY IN GOOD HORTICULTURAL PRACTICES SHALL BE EXERCISED.

6. THE WORK SHALL BE COORDINATED WITH OTHER TRADES TO PREVENT CONFLICTS. COORDINATE THE PLANTING WITH THE IRRIGATION WORK TO ASSURE AVAILABILITY OF WATER AND PROPER LOCATION OF IRRIGATION ITEMS AND PLANTS.

7. ALL PLANTING PITS SHALL BE EXCAVATED TO SIZE AND DEPTH IN ACCORDANCE WITH THE USA STANDARD FOR NURSERY STOCK Z60.1, UNLESS SHOWN OTHERWISE ON THE DRAWINGS, AND BACKFILLED WITH THE PREPARED PLANTING SOIL AS SPECIFIED HEREIN BEFORE (SECTION E). TEST ALL TREE PITS WITH WATER BEFORE PLANTING TO ASSURE PROPER DRAINAGE PERCOLATION IS AVAILABLE. NO ALLOWANCE WILL BE MADE FOR LOST PLANTS DUE TO IMPROPER DRAINAGE. IF POOR DRAINAGE EXISTS, UTILIZE PLANTING DETAIL THAT ADDRESSES THIS CONDITION. TREES SHALL BE SET PLUMB AND HELD IN POSITION UNTIL THE PLANTING MIXTURE HAS BEEN FLUSHED INTO PLACE WITH A SLOW, FULL HOSE STREAM. ALL PLANTING SHALL BE PERFORMED BY PERSONNEL FAMILIAR WITH PLANTING PROCEDURE AND UNDER THE SUPERVISION OF A QUALIFIED PLANTING FOREMAN. PROPER "JETTING IN" SHALL BE ASSURED TO ELIMINATE AIR POCKETS AROUND THE ROOTS. "JET STICK" OR EQUAL IS RECOMMENDED.

8. TAKE ALL NECESSARY PRECAUTIONS TO AVOID DAMAGE TO BUILDINGS AND BUILDING STRUCTURES WHILE INSTALLING TREES.

9. SOIL MIXTURE SHALL BE AS SPECIFIED IN SECTION E OF THESE SPECIFICATIONS. IN ADDITION, EACH PLANTING PIT SHALL RECEIVE 21-GRAM "AGRIFORM" PLANTING TABLETS PER MANUFACTURER'S SPECIFICATIONS OR AS FOLLOWS:

- TWO (2) TABLETS PER 1 GAL PLANT
- THREE (3) TABLETS PER 3 GAL PLANT
- FOUR (4) TABLETS PER 10 GAL PLANT
- LARGER MATERIAL - TWO (2) TABLETS PER 1/2" OF TRUNK CALIPER

10. TREES AND SHRUBS SHALL BE SET STRAIGHT AND AT SUCH A LEVEL THAT AFTER SETTLEMENT, THE PLANT CROWN WILL STAND ONE (1) TO TWO (2) INCHES ABOVE GRADE. EACH PLANT SHALL BE SET IN THE CENTER OF THE PIT. PLANTING SOIL MIXTURE SHALL BE BACKFILLED AND THOROUGHLY TAMPED AROUND THE BALL AND SHALL BE SETTLED BY WATER AFTER TAMPING.

11. FILL HOLE WITH SOIL MIXTURE, MAKING CERTAIN ALL SOIL IS SATURATED. TO DO THIS, FILL HOLE WITH WATER AND ALLOW TO SOAK MINIMUM TWENTY (20) MINUTES, STIRRING IF NECESSARY TO GET SOIL THOROUGHLY WET. PACK LIGHTLY WITH FEET. ADD MORE WET SOIL MIXTURE, BUT DO NOT COVER TOP OF BALL WITH SOIL MIXTURE, ONLY WITH MULCH. ALL BURLAP, ROPE, WIRES, ETC., SHALL BE REMOVED FROM THE SIDES AND TOPS OF BALLS, BUT NO BURLAP SHALL BE PULLED FROM UNDERNEATH.

12. PRUNING: EACH TREE SHALL BE PRUNED TO PRESERVE THE NATURAL CHARACTER OF THE PLANT AS SHOWN ON THE DRAWINGS. ALL SOFT WOOD OR SUCKER GROWTH AND ALL BROKEN OR BADLY DAMAGED BRANCHES SHALL BE REMOVED WITH A CLEAN CUT.

13. SHRUBS AND GROUND COVER PLANTS SHALL BE EVENLY SPACED IN ACCORDANCE WITH THE DRAWINGS AND AS INDICATED ON THE PLANT LIST. CULTIVATE ALL PLANTING AREAS TO A MINIMUM DEPTH OF 6", REMOVE AND DISPOSE ALL DEBRIS. TILL INTO TOP 4" THE PLANTING SOIL MIX AS SPECIFIED IN SECTION E. THOROUGHLY WATER ALL PLANTS AFTER INSTALLATION.

14. TREE GUYING AND BRACING SHALL BE INSTALLED BY THE LANDSCAPE CONTRACTOR IN ACCORDANCE WITH THE PLANS TO INSURE STABILITY AND MAINTAIN TREES IN AN UPRIGHT POSITION. IF THE LANDSCAPE CONTRACTOR AND OWNER DECIDE TO WAIVE THE TREE GUYING AND BRACING, THE OWNER SHALL NOTIFY THE LANDSCAPE ARCHITECT IN WRITING OF THEIR INTENTIONS AND AGREE TO HOLD HARMLESS THE LANDSCAPE ARCHITECT IN THE EVENT ANY TREES FALL DOWN AND DAMAGE PERSON OR PROPERTY.

15. MULCHING: PROVIDE A THREE (3) INCH MINIMUM LAYER OF SPECIFIED MULCH OVER THE ENTIRE AREA OF EACH SHRUB BED, GROUND COVER AND VINE BED AND TREE PIT.

16. HERBICIDE WEED CONTROL: ALL PLANT BEDS SHALL BE KEPT FREE OF NOXIOUS WEEDS UNTIL FINAL ACCEPTANCE OF WORK. IF DIRECTED BY THE OWNER, "ROUND-UP" SHALL BE APPLIED FOR WEED CONTROL BY QUALIFIED PERSONNEL TO ALL PLANTING AREAS IN SPOT APPLICATIONS PER MANUFACTURER'S PRECAUTIONS AND SPECIFICATIONS. PRIOR TO FINAL INSPECTION, TREAT ALL PLANTING BEDS WITH AN APPROVED PRE-EMERGENT HERBICIDE AT AN APPLICATION RATE RECOMMENDED BY THE MANUFACTURER.

P. LAWN SODDING

1. THE WORK CONSISTS OF LAWN BED PREPARATION, SOIL PREPARATION, AND SODDING COMPLETE, IN STRICT ACCORDANCE WITH THE SPECIFICATIONS AND THE APPLICABLE DRAWINGS TO PRODUCE A GRASS LAWN ACCEPTABLE TO THE OWNER.

2. LAWN BED PREPARATION: ALL AREAS THAT ARE TO BE SODDED SHALL BE CLEARED OF ANY ROUGH GRASS, WEEDS, AND DEBRIS, AND THE GROUND BROUGHT TO AN EVEN GRADE. THE WHOLE SURFACE SHALL BE ROLLED WITH A ROLLER WEIGHING NOT MORE THAN ONE-HUNDRED (100) POUNDS PER FOOT OF WIDTH. DURING THE ROLLING, ALL DEPRESSIONS CAUSED BY SETTLEMENT OF ROLLING SHALL BE FILLED WITH ADDITIONAL SOIL, AND THE SURFACE SHALL BE REGRADED AND ROLLED UNTIL PRESENTING A SMOOTH AND EVEN FINISH THAT IS UP TO THE REQUIRED GRADE.

3. SOIL PREPARATION: PREPARE LOOSE BED FOUR (4) INCHES DEEP. APPLY FERTILIZER AT RATE OF TWENTY (20) POUNDS PER ONE THOUSAND (1000) SQUARE FEET. APPLICATION SHALL BE UNIFORM, UTILIZING APPROVED MECHANICAL SPREADERS. MIX FERTILIZER THOROUGHLY WITH THE SOIL TO A DEPTH OF THREE (3) INCHES. HAND RAKE UNTIL ALL BUMPS AND DEPRESSIONS ARE REMOVED. WET PREPARED AREA THOROUGHLY.

4. SODDING

A. THE CONTRACTOR SHALL SOD ALL AREAS THAT ARE NOT PAVED OR PLANTED AS DESIGNATED ON THE DRAWINGS WITHIN THE CONTRACT LIMITS, UNLESS SPECIFICALLY NOTED OTHERWISE.

B. THE SOD SHALL BE CERTIFIED TO MEET TEXAS STATE PLANT BOARD SPECIFICATIONS, ABSOLUTELY TRUE TO VARIETAL TYPE, AND FREE FROM WEEDS, FUNGUS, INSECTS AND DISEASE OF ANY KIND.

C. SOD PANELS SHALL BE LAID TIGHTLY TOGETHER SO AS TO MAKE A SOLID SODDED LAWN AREA. SOD SHALL BE LAID UNIFORMLY AGAINST THE EDGES OF ALL CURBS AND OTHER HARDSCAPE ELEMENTS, PAVED AND PLANTED AREAS. ADJACENT TO BUILDINGS, A FOUR INCH MULCH STRIP SHALL BE PROVIDED. IMMEDIATELY FOLLOWING SOD LAYING, THE LAWN AREAS SHALL BE ROLLED WITH A LAWN ROLLER CUSTOMARILY USED FOR SUCH PURPOSES, AND THEN THOROUGHLY IRRIGATED. IF, IN THE OPINION OF THE OWNER, TOP-DRESSING IS NECESSARY AFTER ROLLING TO FILL THE VOIDS BETWEEN THE SOD PANELS AND TO EVEN OUT INCONSISTENCIES IN THE SOD, CLEAN SAND AS APPROVED BY THE LANDSCAPE ARCHITECT OR OWNER SHALL BE UNIFORMLY SPREAD OVER THE ENTIRE SURFACE OF THE SOD AND THOROUGHLY WATERED IN.

5. DURING DELIVERY, PRIOR TO AND DURING THE PLANTING OF THE LAWN AREAS, THE SOD PANELS SHALL AT ALL TIMES BE PROTECTED FROM EXCESSIVE DRYING AND UNNECESSARY EXPOSURE OF THE ROOTS TO THE SUN. ALL SOD SHALL BE STACKED SO AS NOT TO BE DAMAGED BY SWEATING OR EXCESSIVE HEAT AND MOISTURE.

6. LAWN MAINTENANCE:

A. WITHIN THE CONTRACT LIMITS, THE CONTRACTOR SHALL PRODUCE A DENSE, WELL ESTABLISHED LAWN. THE CONTRACTOR SHALL BE RESPONSIBLE FOR THE REPAIR AND RE-SODDING OF ALL ERODED, SUNKEN OR BARE SPOTS UNTIL CERTIFICATION OF ACCEPTABILITY BY THE LANDSCAPE ARCHITECT OR OWNER. REPAIRED SODDING SHALL BE ACCOMPLISHED AS IN THE ORIGINAL WORK (INCLUDING REGRADING IF NECESSARY).

B. WATER EVERY DAY FOR TEN (10) SUCCESSIVE DAYS, THEN WATER THREE (3) TIMES PER WEEK (AT EVEN INTERVALS) FOR TWO (2) ADDITIONAL WEEKS. ALL WATERING SHALL BE OF SUFFICIENT QUANTITY TO WET OR RESTORE WATER TO DEPTH OF FOUR (4) INCHES.

Q. CLEAN-UP

UPON COMPLETION OF ALL PLANTING WORK AND BEFORE FINAL ACCEPTANCE, THE CONTRACTOR SHALL REMOVE ALL MATERIAL, EQUIPMENT, AND DEBRIS RESULTING FROM HIS WORK. ALL PAVED AREAS SHALL BE BROOM CLEANED AND THE SITE LEFT IN A NEAT AND ACCEPTABLE CONDITION AS APPROVED BY THE OWNER'S AUTHORIZED REPRESENTATIVE.

R. PLANT MATERIAL MAINTENANCE

ALL PLANTS AND PLANTING INCLUDED UNDER THIS CONTRACT SHALL BE MAINTAINED BY WATERING, CULTIVATING, SPRAYING, AND ALL OTHER OPERATIONS (SUCH AS RE-STAKING OR REPAIRING GUY SUPPORTS) NECESSARY TO INSURE A HEALTHY CONDITION BY THE CONTRACTOR UNTIL CERTIFICATION OF ACCEPTABILITY BY THE LANDSCAPE ARCHITECT OR OWNER. MAINTENANCE AFTER THE CERTIFICATION OF ACCEPTABILITY SHALL BE IN ACCORDANCE WITH THE SPECIFICATIONS IN THIS SECTION. CONTRACTORS ARE REQUESTED TO PROVIDE A BID ESTIMATE TO COVER LANDSCAPE AND IRRIGATION MAINTENANCE FOR A PERIOD OF 90 CALENDAR DAYS COMMENCING AFTER ACCEPTANCE.

S. MAINTENANCE (ALTERNATE BID ITEM)

1. CONTRACTORS ARE REQUESTED TO PROVIDE A BID ESTIMATE FOR MAINTENANCE FOLLOWING THE INITIAL 90-DAY MAINTENANCE PERIOD ON A COST PER MONTH BASIS.

T. GUARANTEE

1. THE LIFE AND SATISFACTORY CONDITION OF ALL 15 GALLON AND LARGER PLANT MATERIAL INSTALLED BY THE LANDSCAPE CONTRACTOR SHALL BE GUARANTEED BY THE CONTRACTOR FOR A MINIMUM OF ONE (1) CALENDAR YEAR COMMENCING AT THE TIME OF CERTIFICATION OF ACCEPTABILITY BY THE LANDSCAPE ARCHITECT OR OWNER.

2. THE LIFE AND SATISFACTORY CONDITION OF ALL OTHER PLANT MATERIAL (INCLUDING SOD) INSTALLED BY THE LANDSCAPE C

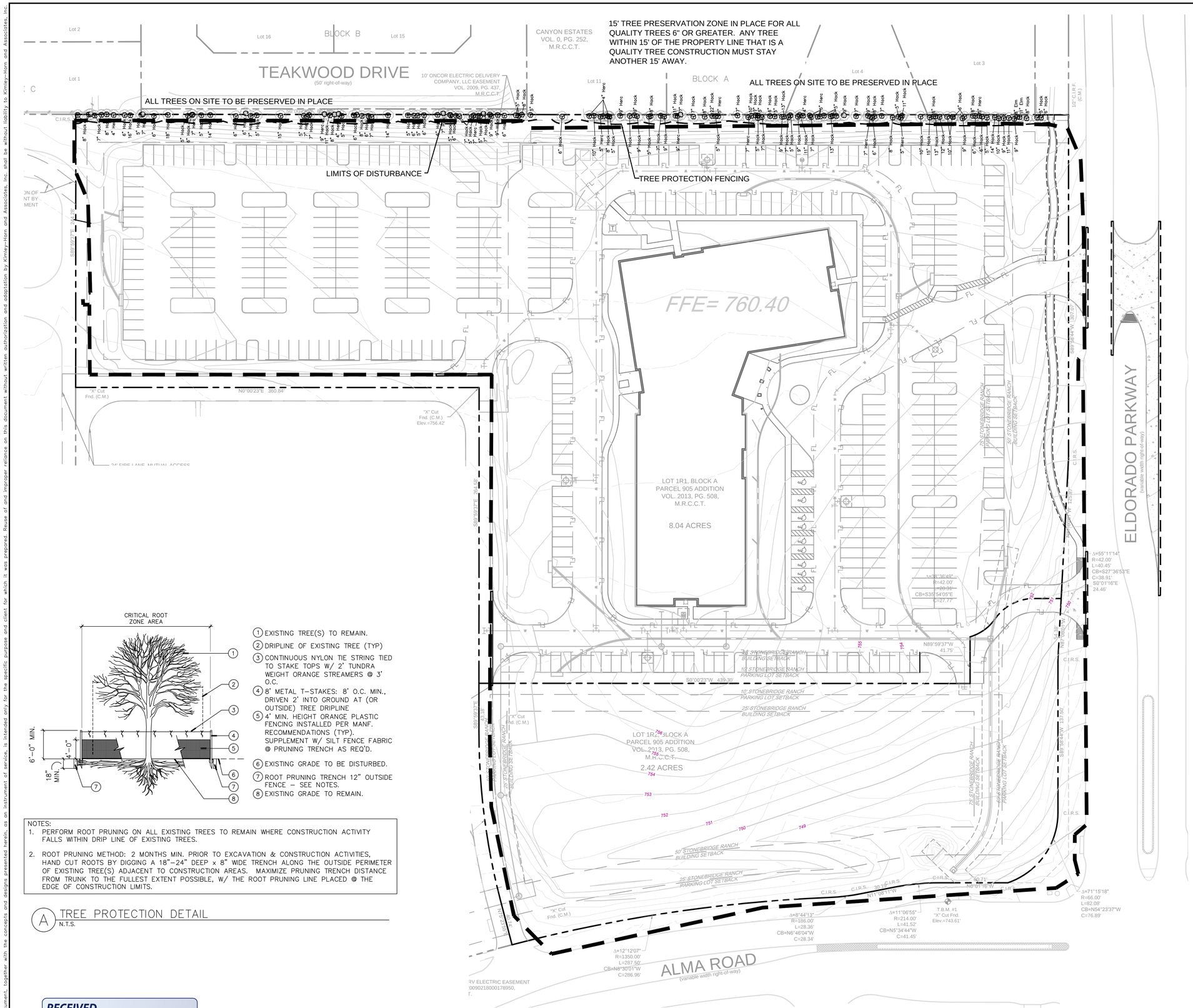

1. EXISTING TREE(S) TO REMAIN.
2. DRIPLINE OF EXISTING TREE (TYP)
3. CONTINUOUS NYLON TIE STRING TIED TO STAKE TOPS W/ 2' TUNDRA WEIGHT ORANGE STREAMERS @ 3' O.C.
4. 8' METAL T-STAKES: 8' O.C. MIN., DRIVEN 2' INTO GROUND AT (OR OUTSIDE) TREE DRIPLINE
5. 4' MIN. HEIGHT ORANGE PLASTIC FENCING INSTALLED PER MANF. RECOMMENDATIONS (TYP). SUPPLEMENT W/ SILT FENCE FABRIC @ PRUNING TRENCH AS REQ'D.
6. EXISTING GRADE TO BE DISTURBED.
7. ROOT PRUNING TRENCH 12" OUTSIDE FENCE – SEE NOTES.
8. EXISTING GRADE TO REMAIN.

NOTES:

1. PERFORM ROOT PRUNING ON ALL EXISTING TREES TO REMAIN WHERE CONSTRUCTION ACTIVITY FALLS WITHIN DRIP LINE OF EXISTING TREES.
2. ROOT PRUNING METHOD: 2 MONTHS MIN. PRIOR TO EXCAVATION & CONSTRUCTION ACTIVITIES, HAND CUT ROOTS BY DIGGING A 18"–24" DEEP x 8" WIDE TRENCH ALONG THE OUTSIDE PERIMETER OF EXISTING TREE(S) ADJACENT TO CONSTRUCTION AREAS. MAXIMIZE PRUNING TRENCH DISTANCE FROM TRUNK TO THE FULLEST EXTENT POSSIBLE, W/ THE ROOT PRUNING LINE PLACED @ THE EDGE OF CONSTRUCTION LIMITS.

A TREE PROTECTION DETAIL
N.T.S.

RECEIVED
By Planning Department at 2:01 pm, Oct 07, 2014

No.	REVISIONS	DATE	BY

Kimley»Horn
5750 GENESIS COURT, SUITE 200, FRISCO, TX 75034
PHONE: 972-335-3580 FAX: 972-335-3779
WWW.KIMLEY-HORN.COM
TEXAS REGISTERED ENGINEERING FIRM F-928

PRELIMINARY
FOR REVIEW ONLY
Not for construction or permit purposes.
Kimley»Horn
R.L.A. LEAH M. CAMPBELL
L.A. No. 2900 Date SEPT 2014

KHA PROJECT 63486525
DATE 9/17/2014
SCALE AS SHOWN
DESIGNED BY: LMC
DRAWN BY: LMC
CHECKED BY: LMC

McKINNEY MEDICAL VILLAGE
COLLIN COUNTY, TEXAS

TREE SURVEY & PRESERVATION PLAN

SHEET NUMBER
L-03

This document, together with the concepts and designs presented herein, as an instrument of service, is intended only for the specific purpose and client for which it was prepared. Reuse of and improper reliance on this document without written authorization and adaptation by Kimley-Horn and Associates, Inc. shall be without liability to Kimley-Horn and Associates, Inc.

IMAGES: XREF:Site; XREF:Util; XREF:dbsdy; XREF:xfeat; XREF:xfstr; XREF:xfloorfeat; XREF:Office; XREF:2436
XREFS: PNOTE; ADOT; 2436; 2436-PM; 2436-EX
PLOTTED BY: LEAH M. CAMPBELL
DWG NAME: K:\FRI_CIVIL\63486525-HARROD-MCKINNEY\DWG\PLAN SET\L-03 TREE SURVEY & PRESERVATION PLAN.DWG
LAST SAVED: 9/29/2014 10:12 AM